Installation Instructions

8200 Series Mortise Locks with Standard Levers

SARGENT
ASSA ABLOY

Motorized Electric Latch Retraction (56-)

1 Tools Required

- #2 and #3 Phillips screwdrivers
- Flat blade screwdriver
- 1/8" Allen wrench

2 Product Components

	Part No.*	Description	Req.
1	Varies	Inside lever handle or knob – consult factory	1
2	———	Handle set screw 1/4-28 UNF	1
3	Varies	Rose	2
4	Varies	Inside adapter kit	1
5	82–0368	Spindle	1
6	82–0184	Cap nut	1
7	01–0079	Washer	2
8	Varies	Adapter and plate assembly	1
9	81–0723	Mounting post	2
10	Varies	Outside lever handle or knob – consult factory	1
11	Varies	Cylinder collar and spring (function dependant)	1 or 2
12	Varies	Cylinder (function dependant)	1 or 2
13	Varies	Lockbody	1
14	Varies	Outside front	1
15	01–1028	Machine screw #8-32 x 1/4"	2
16	82-0347	Lever spring	2
17	82-0614	Spindle anchor	2

Trim components will vary by function number.

*Parts specified are for use with 1-3/4" thick doors."

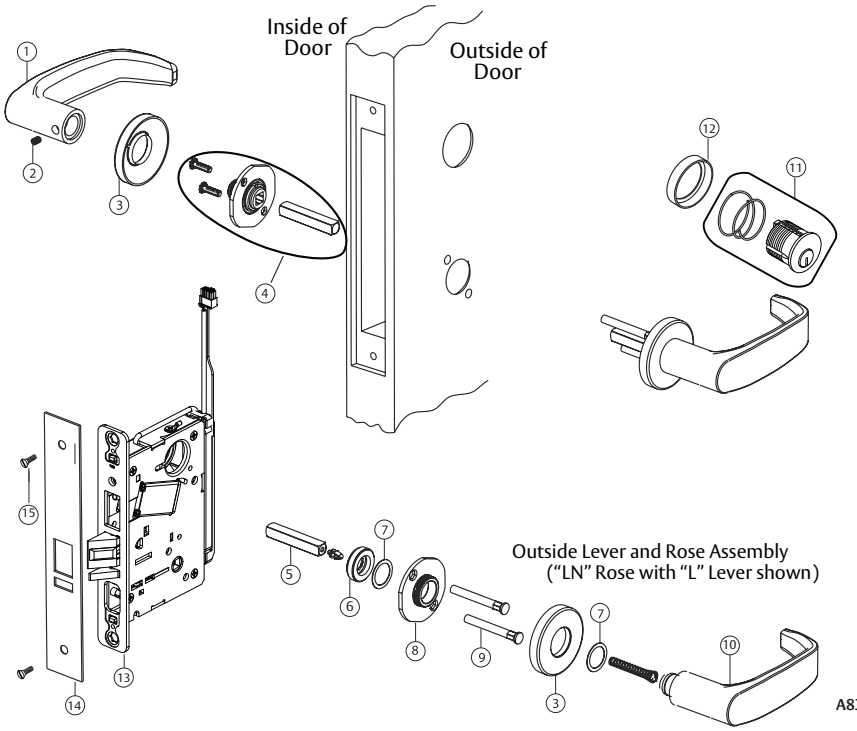

1-800-810-9473 • www.sargentlock.com

Copyright © 2024, SARGENT Manufacturing Company. All rights reserved. Reproduction in whole or in part without the express written permission of SARGENT Manufacturing Company is prohibited.

Experience a safer and more open world

3 How To Change Hand of Lock

Note: Red surface of locking piece must face secure (keyed/locked) side of door.

To rotate locking piece:

1. Position lockbody with red surface of locking piece visible.
2. Insert blade type screwdriver into locking piece slot to rotate locking piece.
3. Push locking piece toward back of lock body and rotate 180° until RED surface shows on opposite side.

   Note: Beveled surface of latch must face strike. The deadlatch is self adjusting. To change hand of latch, see step a. in the figure below.

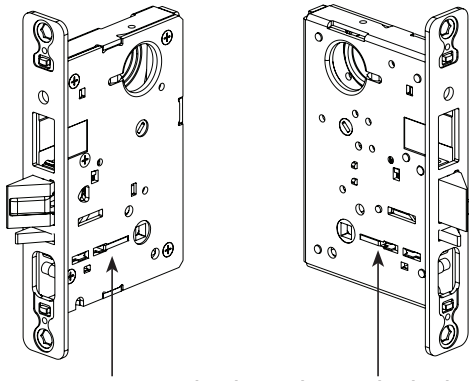

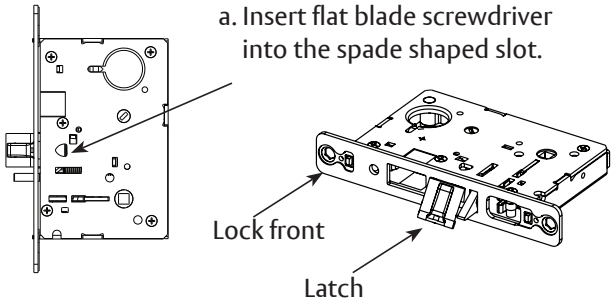

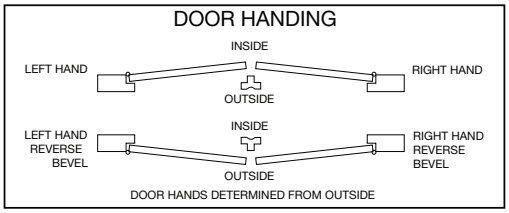

4. Rotate screwdriver 90° to push latch out until back of latch clears lock front.
5. Then rotate latch 180°. Latch will then re-enter lockbody.

   Note: Latch can not be unscrewed.

To view a video of this step, download a free mobile app and scan the QR code with your mobile device.

4 Door Preparation & Install Lock

1. Confirm the handing of the lock (latch and locking piece) matches the handing of the door. Connect lock harness to electrolynx cable routed through the door. Slide lock into the door and hold.Verify strike location according to template. Clean door pocket and verify hand of lock.

   Important: Check template A7057 and A7065 to prep door for function holes, size and location. Verify strike locations according to templates. Clean out door pocket and door edge of any debris.
2. Slide outside lever and rose assembly (or lever and escutcheon assembly) through door and lockbody.

⚠ Important: Door must remain open during installation. Use door stop.

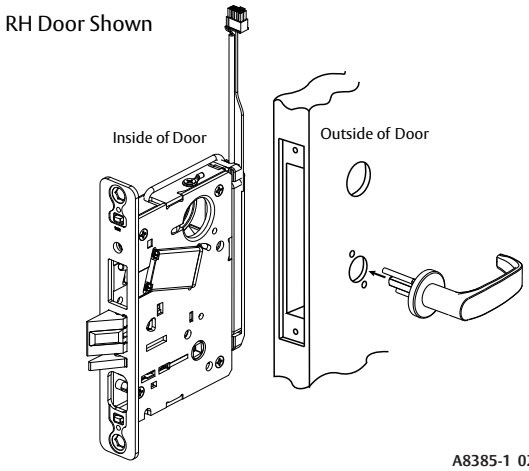

Copyright © 2024, SARGENT Manufacturing Company. All rights reserved. Reproduction in whole or in part without the express written permission of SARGENT Manufacturing Company is prohibited.

5 Sectional / Rose Trim

Note: Slide cylinder (A) through spring (B) and collar (C) (or escutcheon). Thread into lock until cylinder face is flush with collar (C) (or escutcheon) edge. Key slightly pulled out of cylinder will help thread cylinder.

Note: SARGENT logo must be horizontal and on top portion of cylinder.

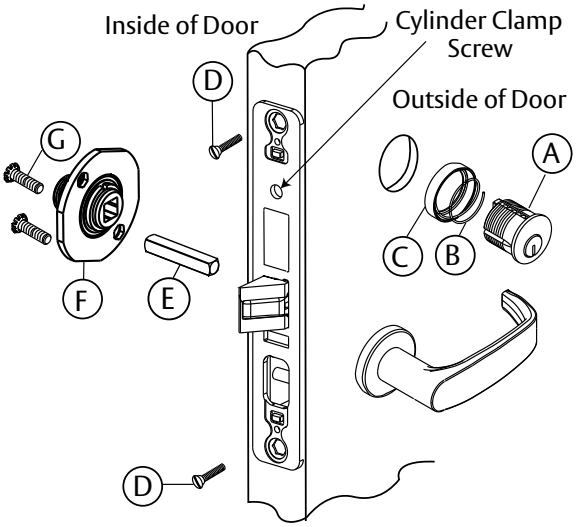

1. Slide cylinder (A) through spring (B) and collar (C) (or escutcheon). Thread into lock until cylinder face is flush with collar (C) (or escutcheon) edge. Key slightly pulled out of cylinder will help thread cylinder.

NOTE: SARGENT logo must be horizontal and on top portion of cylinder.

2. Tighten cylinder clamp screw by hand with #2 Phillips screwdriver.
3. Secure lock in door with two (2) wood screws #12 x 1-1/4" or machine screws #12-24 x 1/2" (D).
4. Slide spindle (E) into lockbody hub.
5. Slide adapter and plate assembly (F) over spindle and secure with two (2) #8-32 screws (G).

Interchangeable core cylinders require control key (stamped “C”) to install. Must request separately. 1-bitted cylinders utilize a control key bitted 113511.

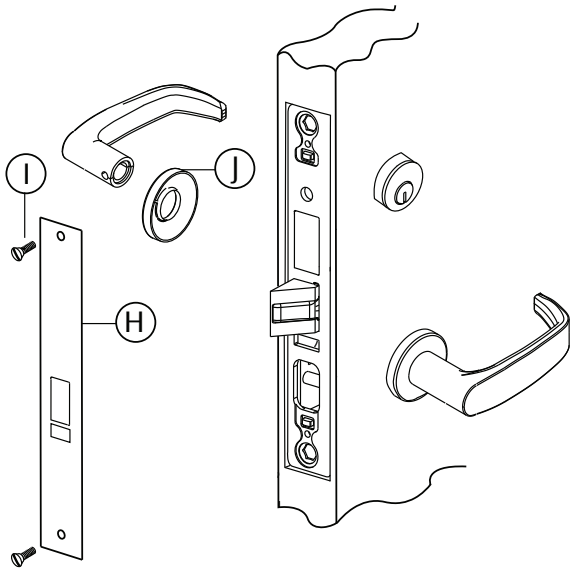

6. Screw rose (J) firmly onto adapter and plate assembly (F) .
7. Attach inside lever and secure with 1/8" Allen wrench. Verify lock is operating correctly prior to closing door.
8. Check for proper operation.
9. Attach outside front (H) with two (2) #8-32 x 1/4" flat head screws (I).

Copyright © 2024, SARGENT Manufacturing Company. All rights reserved. Reproduction in whole or in part without the express written permission of SARGENT Manufacturing Company is prohibited.

6 TE, CE, and LE1 Escutcheon Trim

Through-bolt inside escutcheon to outside escutcheon with two (2) #8-32 x 1-7/8" screws (I).

Note: Screw heads must be visible on inside escutcheon.

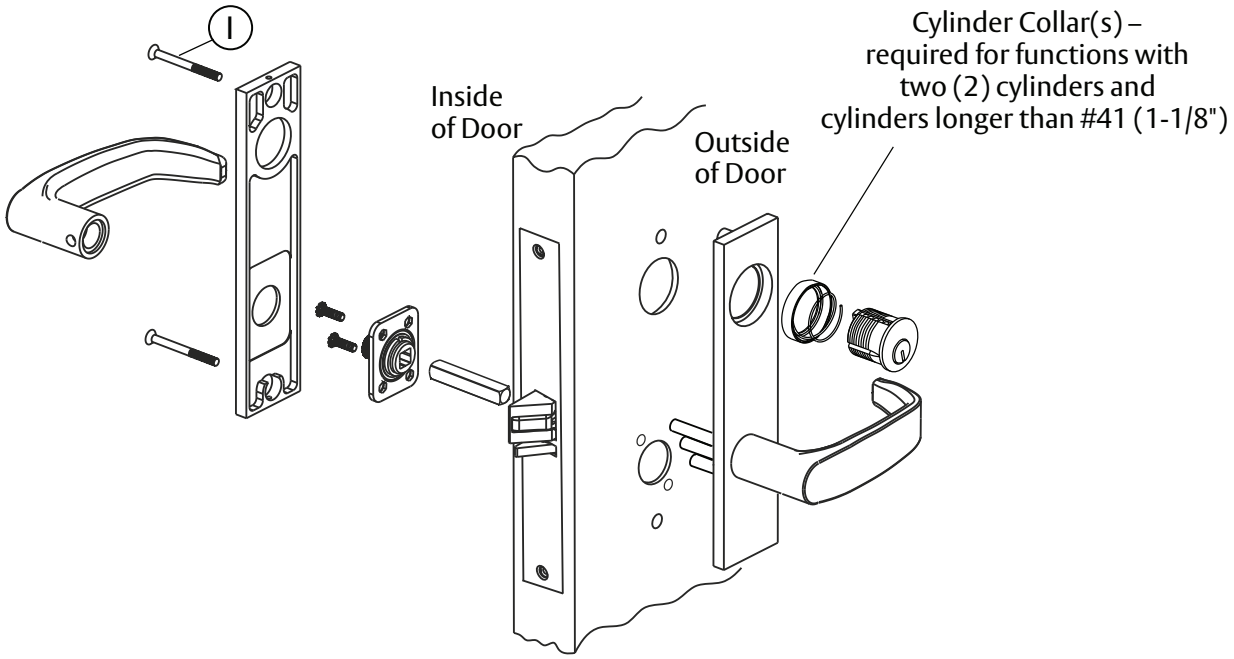

7 LE2, LE4 Escutcheon Trim

NOTE: LE4 and KE4 are designed for concealed cylinders; concealed cylinders are installed prior to attaching escutcheons.

Through-bolt outside escutcheons with (K) and (L) prior to attaching inside escutcheon. Position inside escutcheon over (L) and secure with two (2) set screws (J) using .050" Allen wrench.

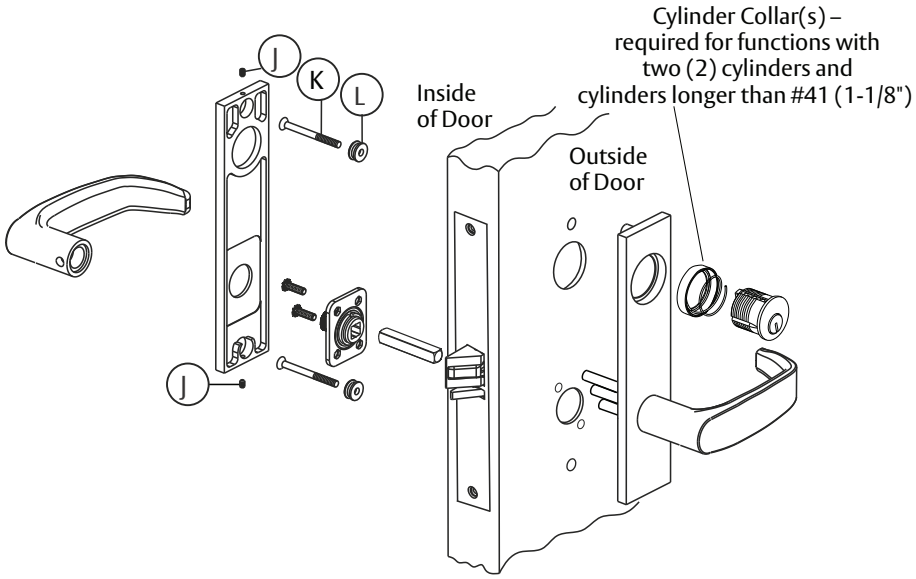

Copyright © 2024, SARGENT Manufacturing Company. All rights reserved. Reproduction in whole or in part without the express written permission of SARGENT Manufacturing Company is prohibited.

8 WT Escutcheon Trim

Inside and outside escutcheons are surface applied using eight (8) #6 x 3/4" wood screws or eight (8) #6-32 x 3/4" machine screws (M).

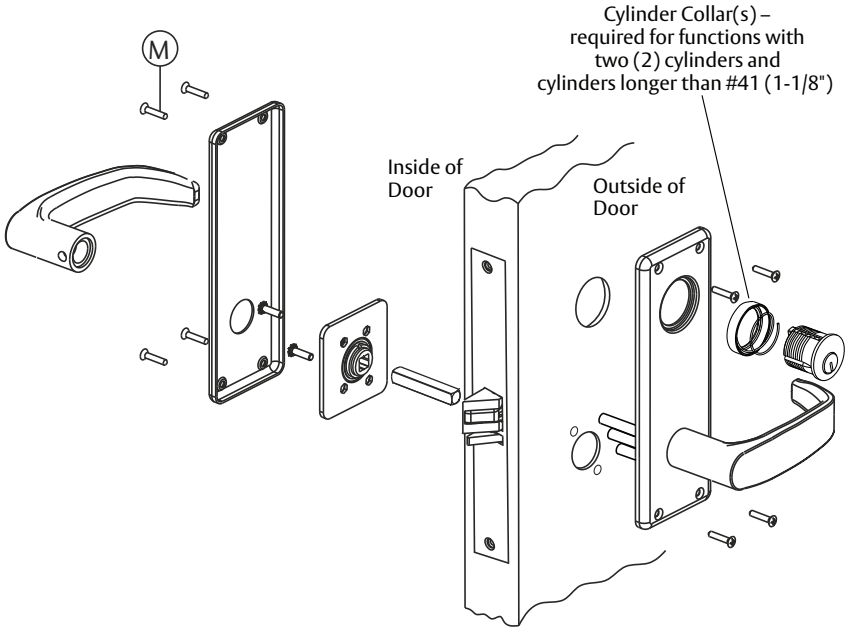

9 LS Security Escutcheon Trim

Install cylinder under escutcheon. Once escutcheon is installed, back cylinder out toward escutcheon as far as possible. When positioned correctly, secure cylinder in lockbody.

Through-bolt inside escutcheon to outside escutcheon with four (4) 1/4-20 x 1-3/8" screws (N).

Note: Screw heads visible on inside escutcheon.

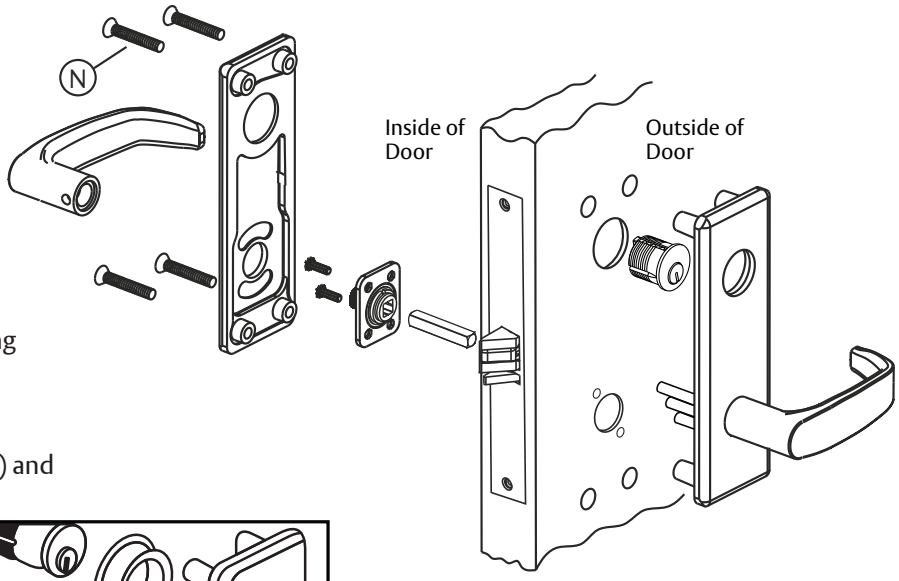

Note: To install double cylinder functions using supplied cylinder retaining cap:

1. Install:
   - both cylinders,
   - cylinder retaining cap (over each cylinder) and
   - escutcheons.
2. Back cylinders out and secure in place.

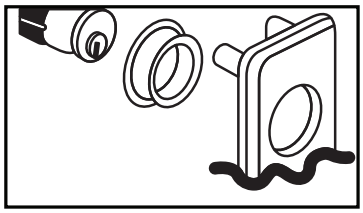

Copyright © 2024, SARGENT Manufacturing Company. All rights reserved. Reproduction in whole or in part without the express written permission of SARGENT Manufacturing Company is prohibited.

10 Lock Schematic

Check polarity. Verify + (red) wire. For assistance, call 800-810-WIRE.

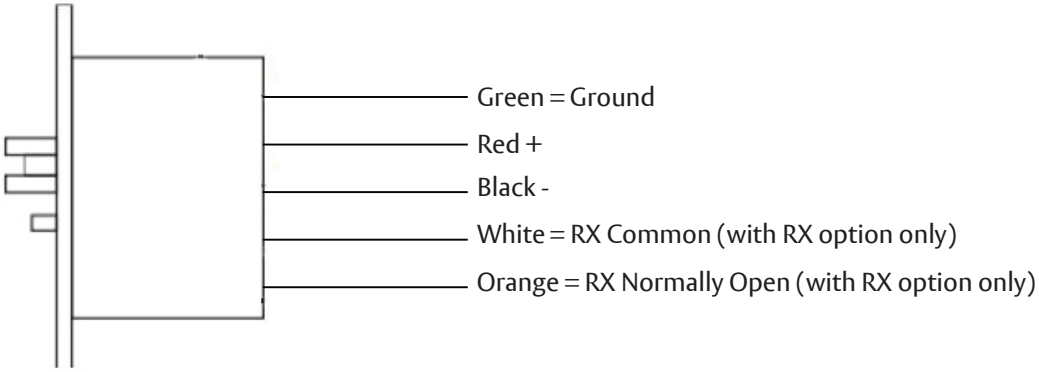

Electrical Specifications

- Voltage: 24 VDC (+10% / - 15%)
- Operating Current: 700mA
- Hold Current: 50mA

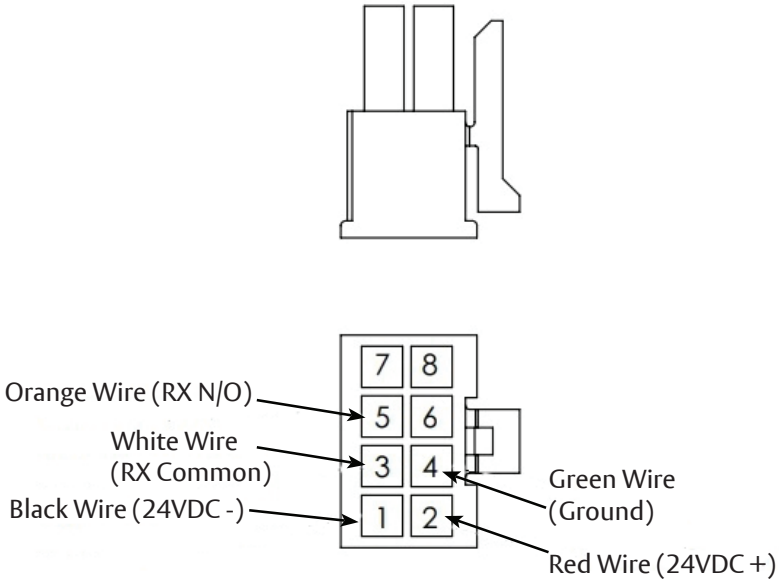

Connector pinout (RX option shown)

Notes:

- The minimum permissible wire size to be used shall not be less than 26 AWG.
- Shall be powered by a UL294 and ULC-60839 Class 2 Power Limited power suplly or Listed Control units.
- Wireing methods shall be in accordance with the National Electrical Code (ANSI/NFPA70), CSA 22.1, Canadian Electrical Code (CEC), Part I, Safety Standard for Electrical Installations, local codes and the authorities having jurisdiction.

Copyright © 2024, SARGENT Manufacturing Company. All rights reserved. Reproduction in whole or in part without the express written permission of SARGENT Manufacturing Company is prohibited.

9 Wiring Diagram - Simple Latch Retraction

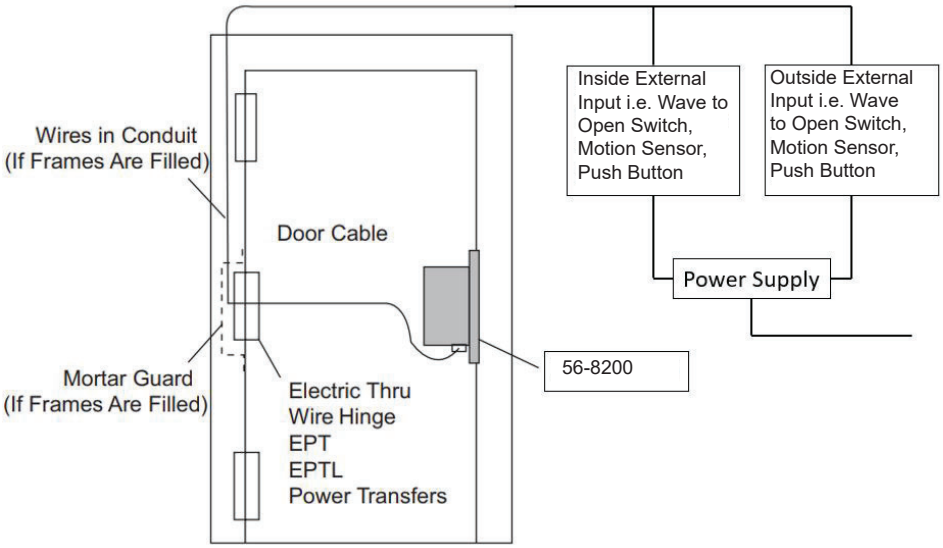

Operation: Activating inside or outside external input will retract latchbolt. Latchbolt remains retracted until power off.

9 Wiring Diagram - Automatic Door

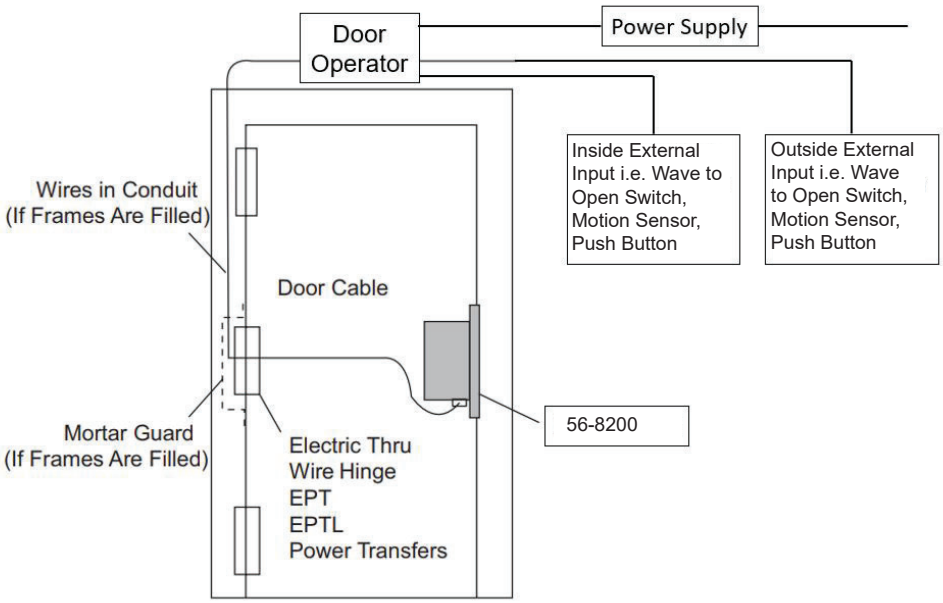

Operation: Activating inside or outside external input will retract latchbolt and door operator will open the door. Latchbolt remains retracted until power off.

Copyright © 2024, SARGENT Manufacturing Company. All rights reserved. Reproduction in whole or in part without the express written permission of SARGENT Manufacturing Company is prohibited.

Experience a safer and more open world

SARGENT
ASSA ABLOY

9 Wiring Diagram - Restroom Privacy

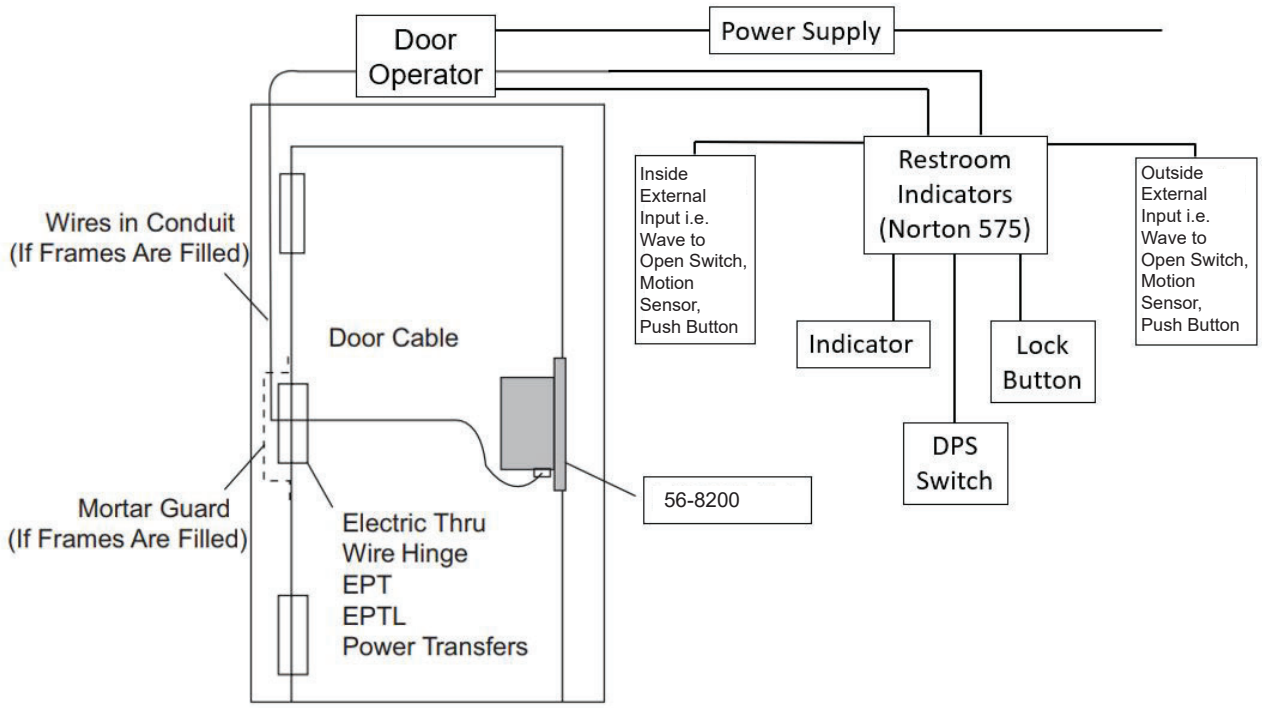

Operation: Activating inside or outside external input will retract latchbolt and door operator will open the door, unless outside external input is disabled by lock button. Indicator will illuminate when outside external input is disabled. Latchbolt remains retracted until power off.

SARGENT Manufacturing Company
100 Sargent Drive
New Haven, CT 06511 USA
800-727-5477
www.sargentlock.com

⚠ WARNING

This product can expose you to lead which is known to the state of California to cause cancer and birth defects or other reproductive harm. For more information go to www.P65warnings.ca.gov.

⚠ WARNING

Changes or modifications to this unit, not expressly approved by the party responsible for compliance could void the user's authority to operate the equipment.

Copyright © 2024, SARGENT Manufacturing Company. All rights reserved. Reproduction in whole or in part without the express written permission of SARGENT Manufacturing Company is prohibited.

Experience a safer and more open world